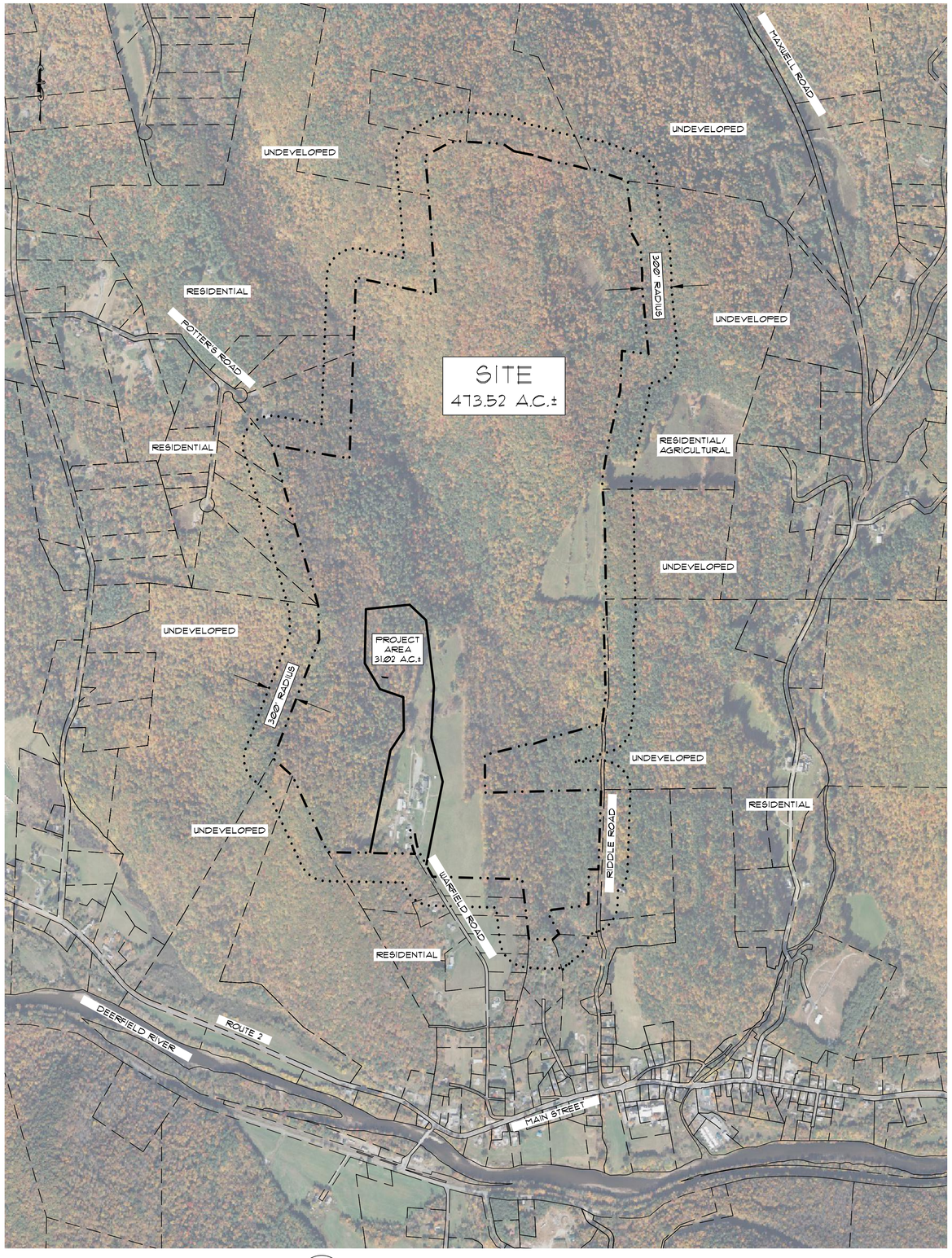

1 KEY MAP & LAND USE PLAN

SCALE: 1"=600'

PLANS TO ACCOMPANY PERMIT APPLICATIONS

PREPARED FOR

NEILSEN TEAM

LOCATED AT

133 WARFIELD ROAD
CHARLEMONT, MASSACHUSETTS

LIST OF DRAWINGS:

1. COVER PAGE
2. OVERALL SITE
3. EXISTING CONDITIONS PLAN 1
4. EXISTING CONDITIONS PLAN 2
5. SITE PLAN 1
6. SITE PLAN 2
7. GRADING & DRAINAGE PLAN
8. UTILITY PLAN 1
9. UTILITY PLAN 2
10. DETAILS

NOTES:

1. EXISTING CONDITIONS SURVEY WAS PERFORMED BY SK DESIGN GROUP, INC. IN JULY, OCTOBER & NOVEMBER, 2023.
2. ELEVATIONS BASED ON NORTH AMERICAN VERTICAL DATUM 1988 (NAVD 88) AND COMPILED FROM LIDAR DATA PROVIDED BY THE NATIONAL OCEANIC AND ATMOSPHERIC ASSOCIATION AND FIELD TOPOGRAPHY PERFORMED BY THIS OFFICE.

RECORD OWNER:
133 WARFIELD REALTY, LLC
133 WARFIELD ROAD
CHARLEMONT, MA 01339

ENGINEER:
SK DESIGN GROUP, INC.
2 FEDERICO DRIVE
PITTSFIELD, MA 01201
413-443-3537

THESE PLANS ARE FOR PERMITTING PURPOSES ONLY
NOT FOR CONSTRUCTION

PLANS TO ACCOMPANY PERMIT APPLICATIONS
PREPARED FOR:
THE NEILSEN TEAM
LOCATED AT:
133 WARFIELD ROAD
CHARLEMONT, MASSACHUSETTS

Design Group, Inc.
Civil Engineers * Surveyors * Consultants
2 FEDERICO DRIVE * PITTSFIELD, MASSACHUSETTS 01201 * (413) 443-3537

PLAN DESCRIPTION:
COVER SHEET

SK DESIGN GROUP PROJECT #:
230178

COMMONWEALTH OF MASSACHUSETTS
JAMES M. SCALISE, II
CIVIL
No. 39883
REGISTERED PROFESSIONAL ENGINEER

JAMES M. SCALISE II
SK DESIGN GROUP PRESIDENT
LICENSE #39863
PROFESSIONAL OF RECORD
PHONE: 413-443-3537

REVISION:

DRAWN BY: PTE	CHECKED BY: JMS II
ORIG. DATE: MAR. 1, 2024	SHEET NO. 1 OF 10
ISSUED FOR: PERMIT	
SCALE: AS NOTED	

G:\SK DESIGN GROUP\2023\230178 Neilsen Team-Warfield Retreat, Charlemont\Drawings\230178 SITE_GLAMPING 03042024.dwg
Plotted On: March 08, 2024 - 8:36am
User Name: pelbridge

KEY (PROPOSED USE):

1. SIGN
2. BUNGALOW
3. GUEST SUITES (MAIN HOUSE)
4. BARN / STORAGE
5. BARN / STORAGE
6. BARNS
7. BARN / STORAGE
8. BARN / STORAGE
9. MARKET
10. FARM STORE
11. PATIO
12. EVENT TENT
13. BANQUET HALL
14. PARKING

1 PROJECT AREA
SCALE: 1"=80'

GRAPHIC SCALE
0 40 80 160
(IN FEET)
1 INCH =80 FEET

THESE PLANS ARE FOR PERMITTING PURPOSES ONLY
NOT FOR CONSTRUCTION

PLANS TO ACCOMPANY PERMIT APPLICATIONS
PREPARED FOR:
NEILSEN TEAM
LOCATED AT:
133 WARFIELD ROAD
CHARLEMONT, MASSACHUSETTS

Design Group, Inc.
Civil Engineers * Surveyors * Consultants
2 FEDERICO DRIVE * PITTSFIELD, MASSACHUSETTS 01201 * (413) 443-3537

PLAN DESCRIPTION:
OVERALL SITE PLAN

SK DESIGN GROUP PROJECT #:
230178

COMMONWEALTH OF MASSACHUSETTS
JAMES M. SCALISE, II
CIVIL
No. 39863
REGISTERED PROFESSIONAL ENGINEER

JAMES M. SCALISE II
SK DESIGN GROUP PRESIDENT
LICENSE #39863
PROFESSIONAL OF RECORD
PHONE: 413-443-3537

REVISION:

DRAWN BY: PTE	CHECKED BY: JMS II
ORIG. DATE: MAR. 1, 2024	SHEET NO. 2 OF 10
ISSUED FOR: PERMIT	
SCALE: AS NOTED	

G:\SK DESIGN GROUP\2023\230178 Neilsen Team-Warfield Retreat, Charlemont\Drawings\230178 SITE_GLAMPING 03042024.dwg
Plotted On: Friday, March 08, 2024 - 8:36am
User Name: peldridge

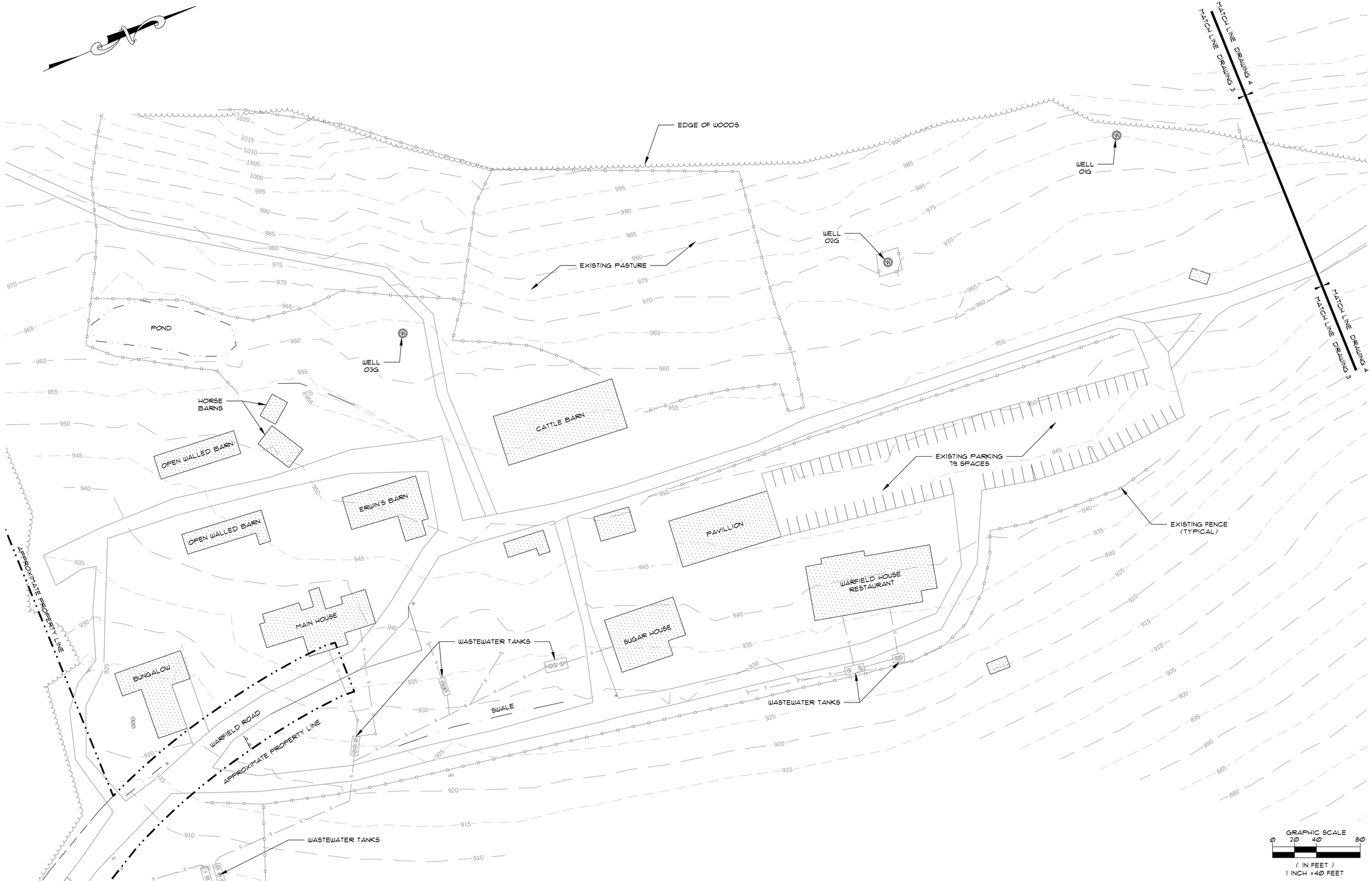

1 SITE PLAN
SCALE: 1"=40'

NOTES:

1. EXISTING CONDITIONS SURVEY WAS PERFORMED BY SK DESIGN GROUP, INC. ON VARIOUS DATES IN 2021, 2022 & 2023.
2. ELEVATIONS BASED ON NORTH AMERICAN VERTICAL DATUM 1988 (NAVD 88).

THESE PLANS ARE FOR PERMITTING PURPOSES ONLY
NOT FOR CONSTRUCTION

PLANS TO ACCOMPANY PERMIT APPLICATIONS
PREPARED FOR:
THE NEILSEN TEAM
LOCATED AT:
WARFIELD ROAD
CHARLEMONT, MASSACHUSETTS

Design Group, Inc.
Civil Engineers • Surveyors • Consultants
2 FEDERICO DRIVE • PITTSFIELD, MASSACHUSETTS 01201 • (413) 443-3537

PLAN DESCRIPTION:
EXISTING CONDITIONS PLAN 1

SK DESIGN GROUP PROJECT #:
230178

COMMONWEALTH OF MASSACHUSETTS
JAMES M. SCALISE, II
CIVIL
No. 39863
REGISTERED PROFESSIONAL ENGINEER

JAMES M. SCALISE II
SK DESIGN GROUP PRESIDENT
LICENSE #39863
PROFESSIONAL OF RECORD
PHONE: 413-443-3537

REVISION:

DRAWN BY: PTE	CHECKED BY: JMS II
ORIG. DATE: MAR. 1, 2024	SHEET NO. 3 OF 10
ISSUED FOR: PERMIT	
SCALE: AS NOTED	

G:\SK DESIGN GROUP\2023\230178 Neilsen Team-Warfield Retreat, Charlemont\Drawings\230178 SITE_GLAMPING 03042024.dwg
Plotted On: Thursday, March 06, 2024 - 8:38am
User Name: peterridge

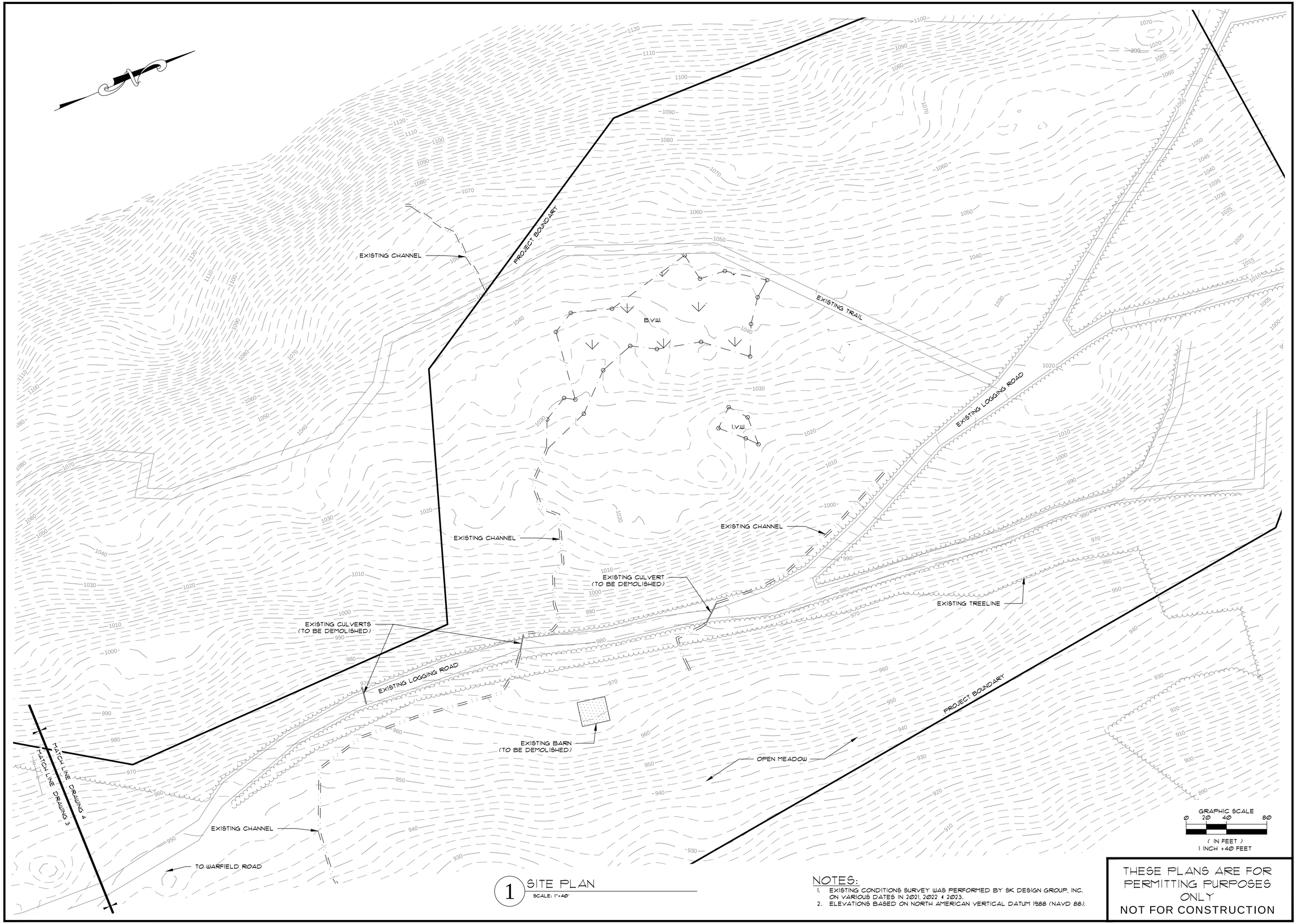

1 SITE PLAN

SCALE: 1"=40'

NOTES:

1. EXISTING CONDITIONS SURVEY WAS PERFORMED BY SK DESIGN GROUP, INC. ON VARIOUS DATES IN 2021, 2022 & 2023.
2. ELEVATIONS BASED ON NORTH AMERICAN VERTICAL DATUM 1988 (NAVD 88).

THESE PLANS ARE FOR PERMITTING PURPOSES ONLY

NOT FOR CONSTRUCTION

PLANS TO ACCOMPANY PERMIT APPLICATIONS

PREPARED FOR:

THE NEILSEN TEAM

LOCATED AT:

WARFIELD ROAD

CHARLEMONT, MASSACHUSETTS

Design Group, Inc.

Civil Engineers * Surveyors * Consultants

2 FEDERICO DRIVE * PITTSFIELD, MASSACHUSETTS 01201 * (413) 443-3537

PLAN DESCRIPTION:

EXISTING CONDITIONS PLAN 2

SK DESIGN GROUP PROJECT #:

230178

COMMONWEALTH OF MASSACHUSETTS
JAMES M. SCALISE, II
CIVIL
No. 39983
REGISTERED PROFESSIONAL ENGINEER

JAMES M. SCALISE II
SK DESIGN GROUP PRESIDENT
LICENSE #39983
PROFESSIONAL OF RECORD
PHONE: 413-443-3537

REVISION:

DRAWN BY: PTE	CHECKED BY: JMS II
ORIG. DATE: MAR. 1, 2024	SHEET NO. 4 OF 10
ISSUED FOR: PERMIT	
SCALE: AS NOTED	

G:\SK DESIGN GROUP\2023\230178 Neilsen Team-Warfield Retreat, Charlemont\Drawings\230178 SITE_GLAMPING 03042024.dwg
Plotted On: Friday, March 08, 2024 - 8:36am
User Name: peldridge

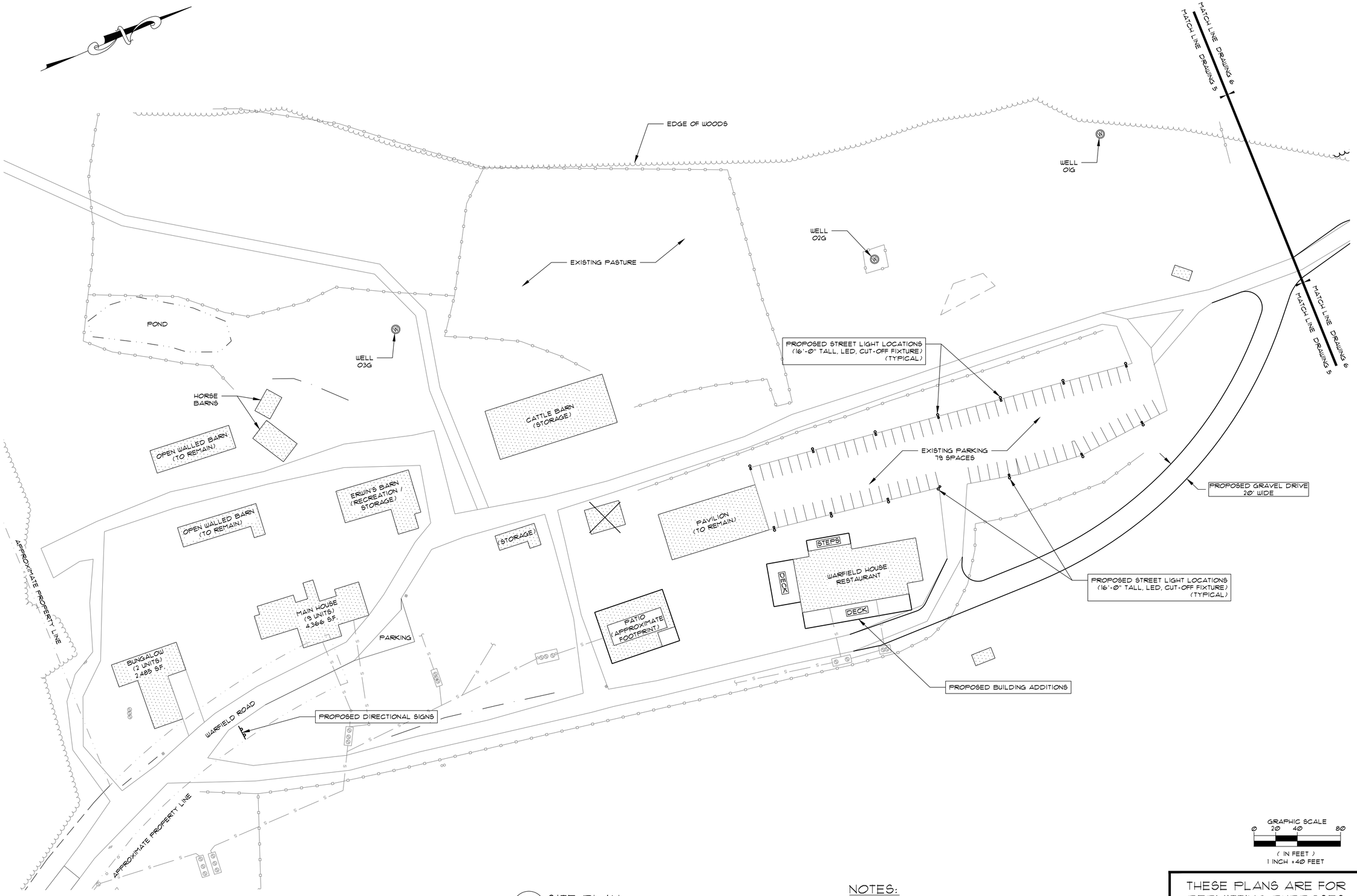

1 SITE PLAN
SCALE: 1"=40'

NOTES:

1. EXISTING CONDITIONS SURVEY WAS PERFORMED BY SK DESIGN GROUP, INC. ON VARIOUS DATES IN 2021, 2022 & 2023.
2. ELEVATIONS BASED ON NORTH AMERICAN VERTICAL DATUM 1988 (NAVD 88).
3. PROPOSED CABINS SHOWN ARE GRAPHICAL ONLY AND MAY VARY IN CONFIGURATION AND ORIENTATION

THESE PLANS ARE FOR PERMITTING PURPOSES ONLY
NOT FOR CONSTRUCTION

PLANS TO ACCOMPANY PERMIT APPLICATIONS
PREPARED FOR:
THE NEILSEN TEAM
LOCATED AT:
WARFIELD ROAD
CHARLEMONT, MASSACHUSETTS

Design Group, Inc.
Civil Engineers * Surveyors * Consultants
2 FEDERICO DRIVE * PITTSFIELD, MASSACHUSETTS 01201 * (413) 443-3537

PLAN DESCRIPTION:
PROPOSED SITE PLAN 1

SK DESIGN GROUP PROJECT #:
230178

COMMONWEALTH OF MASSACHUSETTS
JAMES M. SCALISE, II
CIVIL
No. 39863
REGISTERED PROFESSIONAL ENGINEER

JAMES M. SCALISE II
SK DESIGN GROUP PRESIDENT
LICENSE #39863
PROFESSIONAL OF RECORD
PHONE: 413-443-3537

REVISION:

DRAWN BY: PTE	CHECKED BY: JMS II
ORIG. DATE: MAR. 1, 2024	SHEET NO. 5 OF 10
ISSUED FOR: PERMIT	
SCALE: AS NOTED	

G:\SK DESIGN GROUP\2023\230178 Neilsen Team-Warfield Retreat, Charlemont\Drawings\230178 SITE_GLAMPING 03042024.dwg
Plotted On: Friday, March 08, 2024 - 8:30am
User Name: peteridge

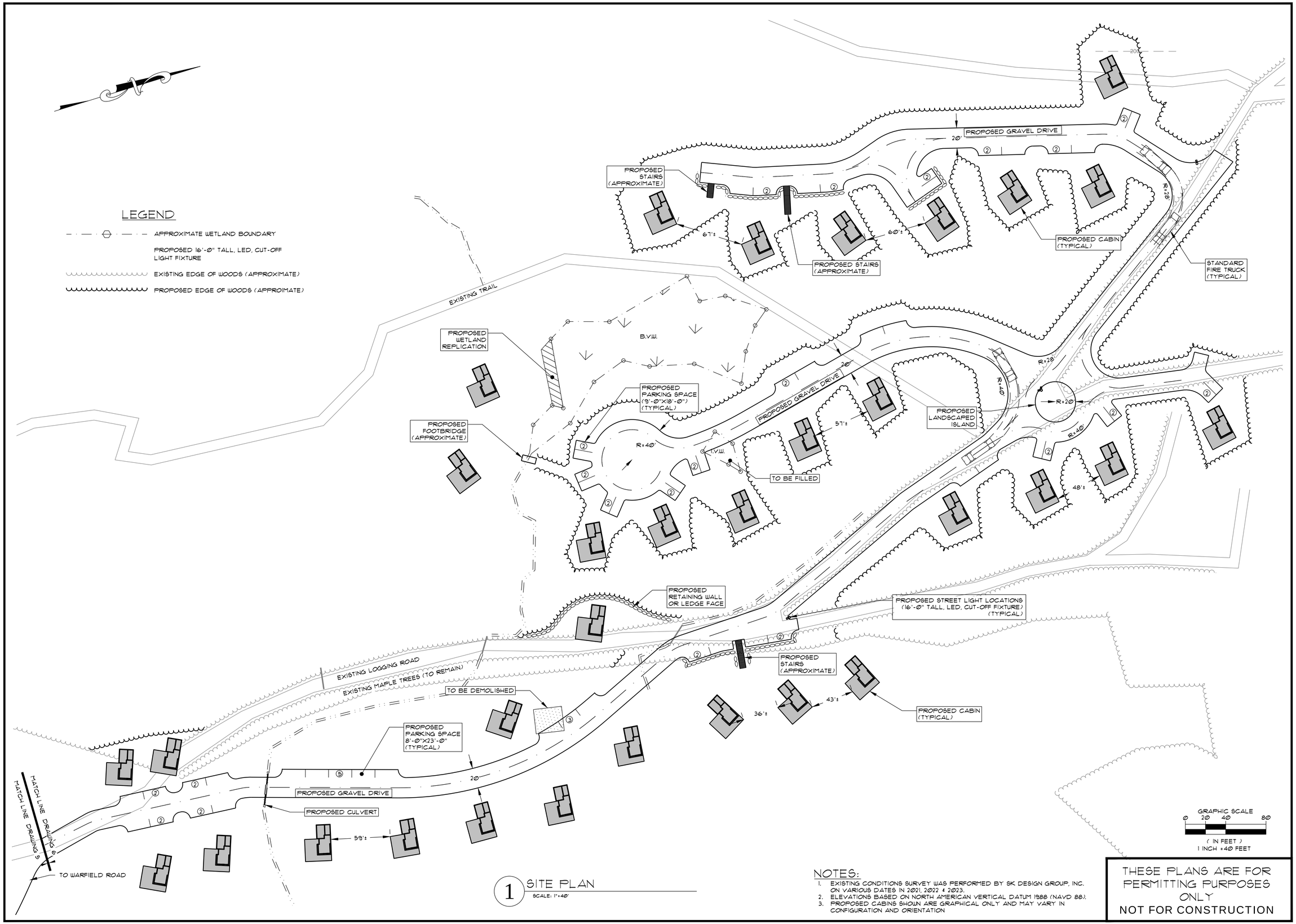

1 SITE PLAN
SCALE: 1"=40'

NOTES:

1. EXISTING CONDITIONS SURVEY WAS PERFORMED BY SK DESIGN GROUP, INC. ON VARIOUS DATES IN 2021, 2022 & 2023.
2. ELEVATIONS BASED ON NORTH AMERICAN VERTICAL DATUM 1988 (NAVD 88).
3. PROPOSED CABINS SHOWN ARE GRAPHICAL ONLY AND MAY VARY IN CONFIGURATION AND ORIENTATION

THESE PLANS ARE FOR PERMITTING PURPOSES ONLY
NOT FOR CONSTRUCTION

PLANS TO ACCOMPANY PERMIT APPLICATIONS
PREPARED FOR:
THE NEILSEN TEAM
LOCATED AT:
WARFIELD ROAD
CHARLEMONT, MASSACHUSETTS

Design Group, Inc.
Civil Engineers * Surveyors * Consultants
2 FEDERICO DRIVE * PITTSFIELD, MASSACHUSETTS 01201 * (413) 443-3537

PLAN DESCRIPTION:
PROPOSED SITE PLAN 2

SK DESIGN GROUP PROJECT #:
230178

COMMONWEALTH OF MASSACHUSETTS
JAMES M. SCALISE, II
CIVIL
No. 39863
REGISTERED PROFESSIONAL ENGINEER

JAMES M. SCALISE II
SK DESIGN GROUP PRESIDENT
LICENSE #39863
PROFESSIONAL OF RECORD
PHONE: 413-443-3537

REVISION:

DRAWN BY: PTE	CHECKED BY: JMS II
ORIG. DATE: MAR. 1, 2024	SHEET NO. 6 OF 10
ISSUED FOR: PERMIT	
SCALE: AS NOTED	

G:\SK DESIGN GROUP\2023\230178 Neilsen Team-Warfield Retreat, Charlemont\Drawings\230178 SITE_GLAMPING 03042024.dwg
Plotted On: Monday, March 08, 2024 - 8:38am
User Name: peterdge

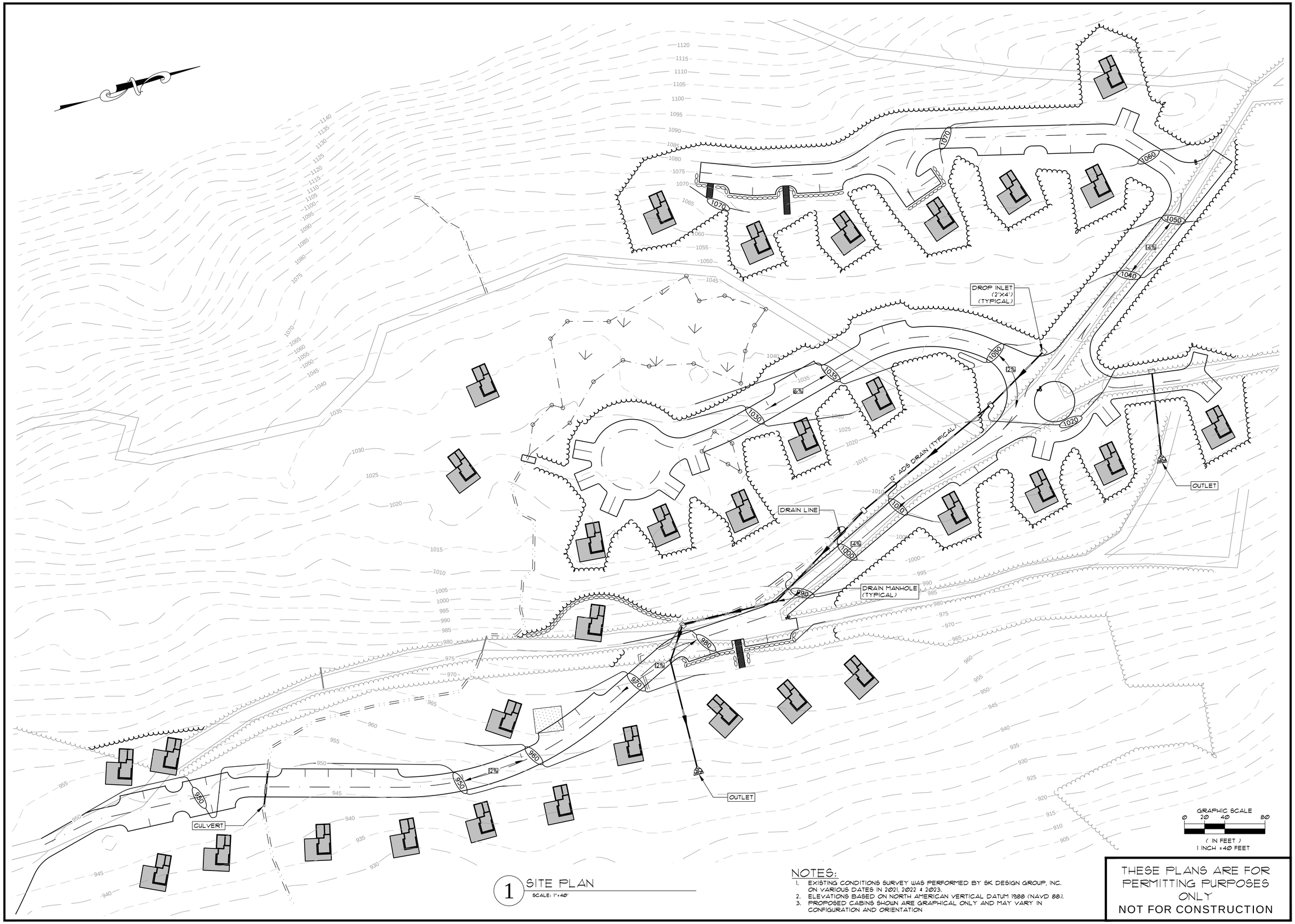

1 SITE PLAN
SCALE: 1"=40'

NOTES:

1. EXISTING CONDITIONS SURVEY WAS PERFORMED BY SK DESIGN GROUP, INC. ON VARIOUS DATES IN 2021, 2022 & 2023.
2. ELEVATIONS BASED ON NORTH AMERICAN VERTICAL DATUM 1988 (NAVD 88).
3. PROPOSED CABINS SHOWN ARE GRAPHICAL ONLY AND MAY VARY IN CONFIGURATION AND ORIENTATION

THESE PLANS ARE FOR PERMITTING PURPOSES ONLY
NOT FOR CONSTRUCTION

PLANS TO ACCOMPANY PERMIT APPLICATIONS
PREPARED FOR:
THE NEILSEN TEAM
LOCATED AT:
WARFIELD ROAD
CHARLEMONT, MASSACHUSETTS

Design Group, Inc.
Civil Engineers * Surveyors * Consultants
2 FEDERICO DRIVE * PITTSFIELD, MASSACHUSETTS 01201 * (413) 443-3537

PLAN DESCRIPTION:
GRADING AND DRAINAGE PLAN

SK DESIGN GROUP PROJECT #:
230178

COMMONWEALTH OF MASSACHUSETTS
JAMES M. SCALISE, II
CIVIL
No. 39863
REGISTERED PROFESSIONAL ENGINEER

JAMES M. SCALISE II
SK DESIGN GROUP PRESIDENT
LICENSE #39863
PROFESSIONAL OF RECORD
PHONE: 413-443-3537

REVISION:

DRAWN BY: PTE	CHECKED BY: JMS II
ORIG. DATE: MAR. 1, 2024	SHEET NO. 7 OF 10
ISSUED FOR: PERMIT	
SCALE: AS NOTED	

G:\SK DESIGN GROUP\2023\230178 Neilsen Team-Warfield Retreat, Charlemont\Drawings\230178 SITE_GLAMPING 03042024.dwg
Plotted On: Monday, March 08, 2024 - 8:38am
User Name: peteridge

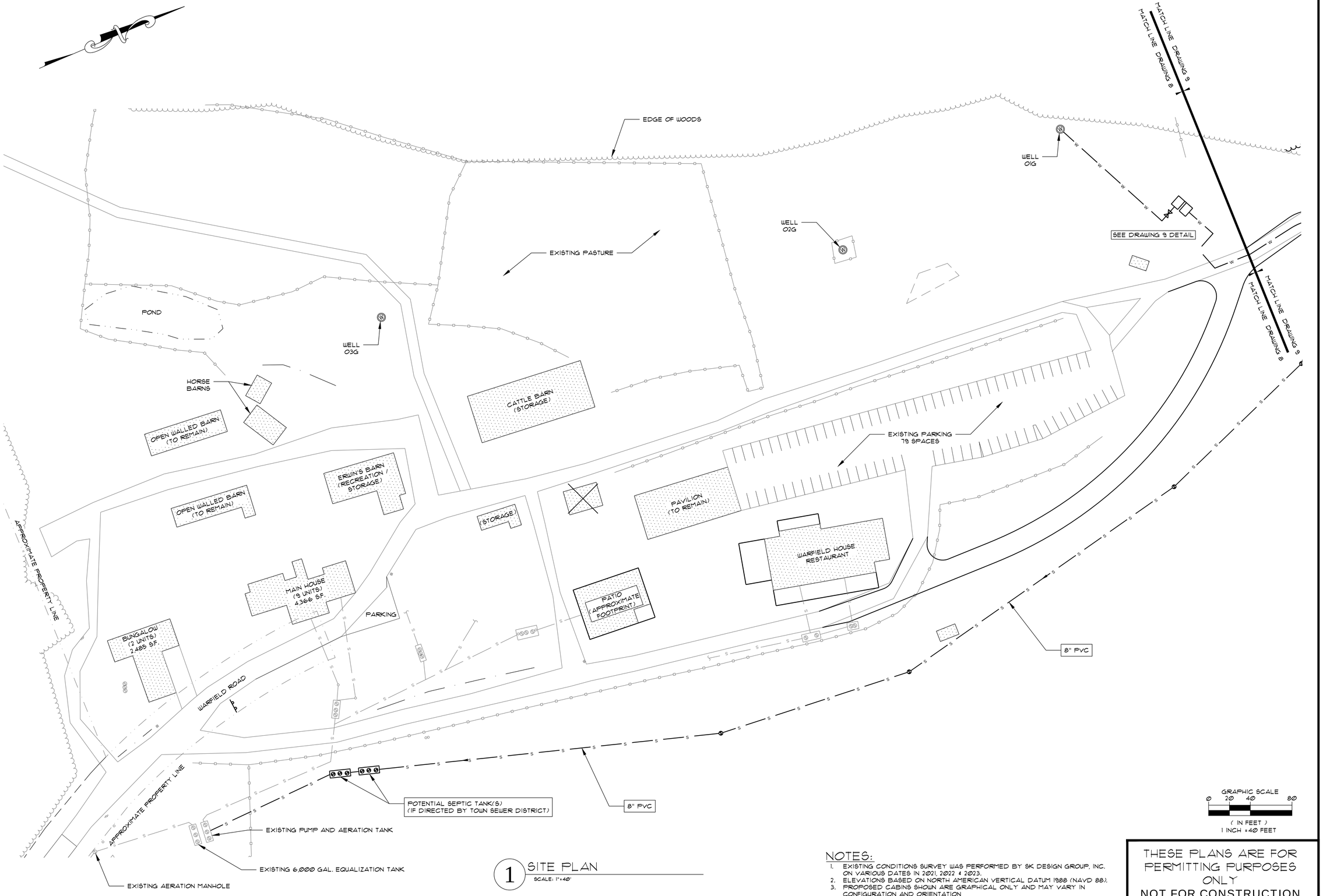

1 SITE PLAN
SCALE: 1"=40'

NOTES:

1. EXISTING CONDITIONS SURVEY WAS PERFORMED BY SK DESIGN GROUP, INC. ON VARIOUS DATES IN 2021, 2022 & 2023.
2. ELEVATIONS BASED ON NORTH AMERICAN VERTICAL DATUM 1988 (NAVD 88).
3. PROPOSED CABINS SHOWN ARE GRAPHICAL ONLY AND MAY VARY IN CONFIGURATION AND ORIENTATION

THESE PLANS ARE FOR PERMITTING PURPOSES ONLY
NOT FOR CONSTRUCTION

PLANS TO ACCOMPANY PERMIT APPLICATIONS
PREPARED FOR:
THE NEILSEN TEAM
LOCATED AT:
WARFIELD ROAD
CHARLEMONT, MASSACHUSETTS

Design Group, Inc.
Civil Engineers * Surveyors * Consultants
2 FEDERICO DRIVE * PITTSFIELD, MASSACHUSETTS 01201 * (413) 443-3537

PLAN DESCRIPTION:
UTILITIES PLAN 1

SK DESIGN GROUP PROJECT #:
230178

COMMONWEALTH OF MASSACHUSETTS
JAMES M. SCALISE, II
CIVIL
No. 39863
REGISTERED PROFESSIONAL ENGINEER

JAMES M. SCALISE II
SK DESIGN GROUP PRESIDENT
LICENSE #39863
PROFESSIONAL OF RECORD
PHONE: 413-443-3537

REVISION:

DRAWN BY: PTE	CHECKED BY: JMS II
ORIG. DATE: MAR. 1, 2024	SHEET NO. 8 OF 10
ISSUED FOR: PERMIT	
SCALE: AS NOTED	

G:\SK DESIGN GROUP\2023\230178 Neilsen Team-Warfield Retreat, Charlemont\Drawings\230178 SITE_GLAMPING 03042024.dwg
Plotted On: March 08, 2024 - 8:39am
User Name: peterdrige

HYDRANT DETAIL

SCALE: N.T.S.

2 DETAIL

SCALE: 1"=40'

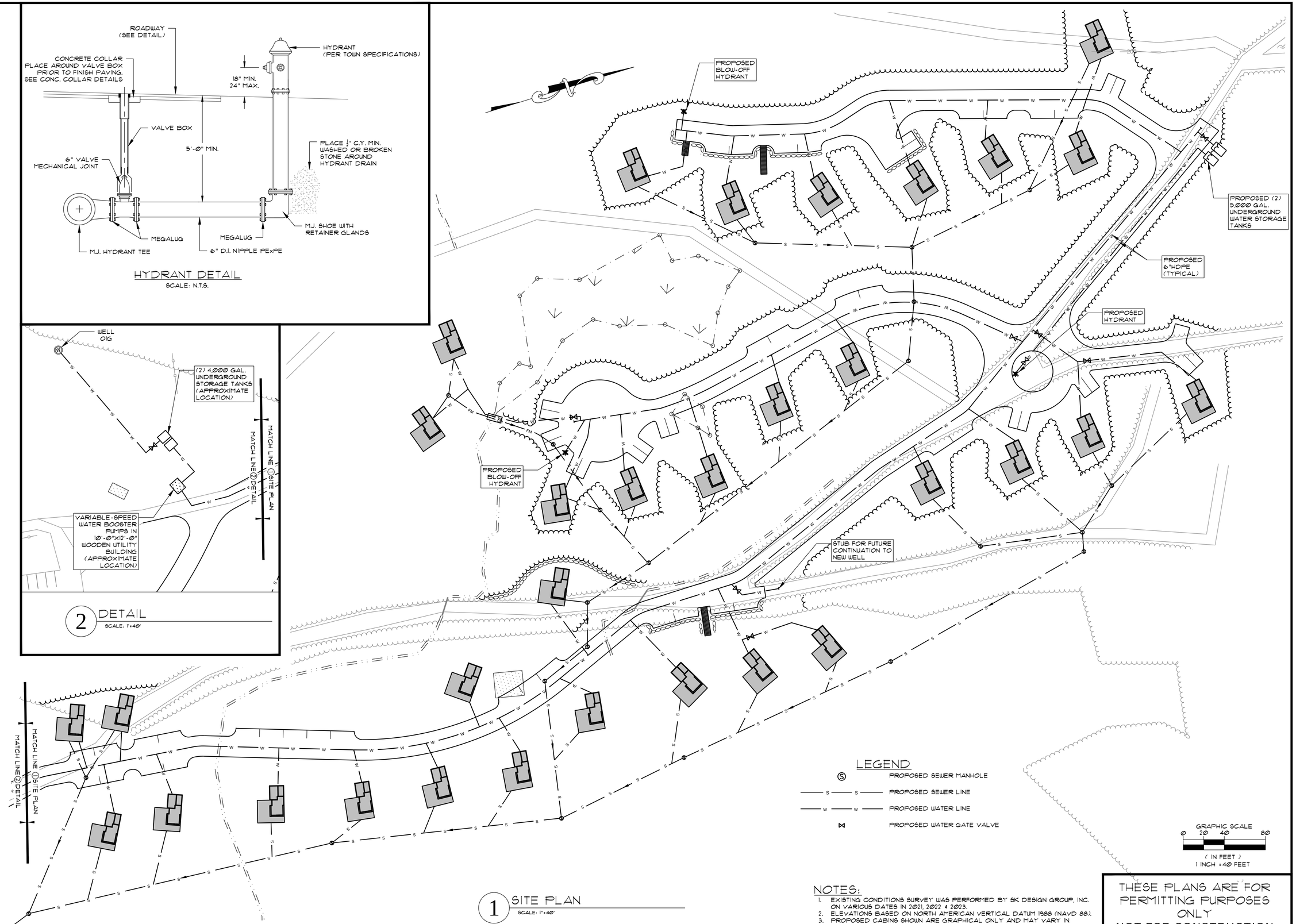

1 SITE PLAN

SCALE: 1"=40'

LEGEND

Ⓢ	PROPOSED SEWER MANHOLE
—— S —— S ——	PROPOSED SEWER LINE
—— W —— W ——	PROPOSED WATER LINE
⋈	PROPOSED WATER GATE VALVE

GRAPHIC SCALE

0 20 40 80

(IN FEET)
1 INCH = 40 FEET

NOTES:

1. EXISTING CONDITIONS SURVEY WAS PERFORMED BY SK DESIGN GROUP, INC. ON VARIOUS DATES IN 2021, 2022 & 2023.
2. ELEVATIONS BASED ON NORTH AMERICAN VERTICAL DATUM 1988 (NAVD 88).
3. PROPOSED CABINS SHOWN ARE GRAPHICAL ONLY AND MAY VARY IN CONFIGURATION AND ORIENTATION

THESE PLANS ARE FOR PERMITTING PURPOSES ONLY
NOT FOR CONSTRUCTION

PLANS TO ACCOMPANY PERMIT APPLICATIONS
PREPARED FOR:
THE NEILSEN TEAM
LOCATED AT:
WARFIELD ROAD
CHARLEMONT, MASSACHUSETTS

Design Group, Inc.
Civil Engineers * Surveyors * Consultants
2 FEDERICO DRIVE * PITTSFIELD, MASSACHUSETTS 01201 * (413) 443-3537

PLAN DESCRIPTION:
UTILITIES PLAN 2

SK DESIGN GROUP PROJECT #:
230178

COMMONWEALTH OF MASSACHUSETTS
JAMES M. SCALISE, II
CIVIL
No. 39863
REGISTERED PROFESSIONAL ENGINEER

JAMES M. SCALISE II
SK DESIGN GROUP PRESIDENT
LICENSE #39863
PROFESSIONAL OF RECORD
PHONE: 413-443-3537

REVISION:

DRAWN BY: PTE	CHECKED BY: JMS II
ORIG. DATE: MAR. 1, 2024	SHEET NO. 9 OF 10
ISSUED FOR: PERMIT	
SCALE: AS NOTED	

G:\SK DESIGN GROUP\2023\230178 Neilsen Team-Warfield Retreat, Charlemont\Drawings\230178 SITE_GLAMPING 03042024.dwg
Plotted On: Friday, March 08, 2024 - 8:39am
User Name: peteridge

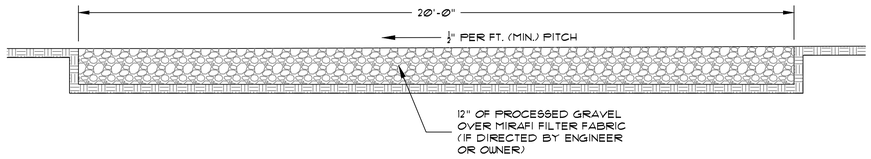

GRAVEL DRIVEWAY DETAIL

SCALE: 1"=2'

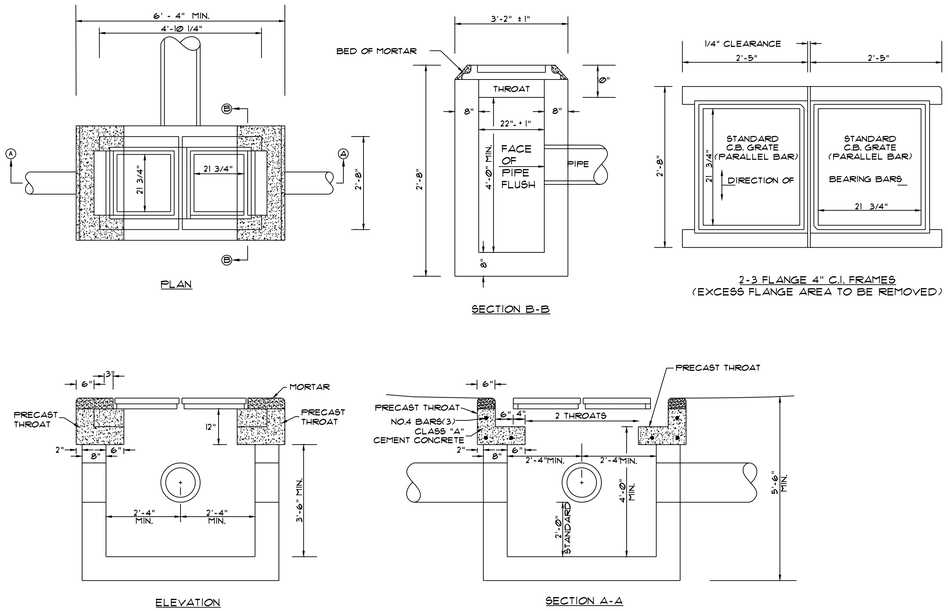

TYPICAL DROP INLET DETAIL

SCALE: N.T.S.

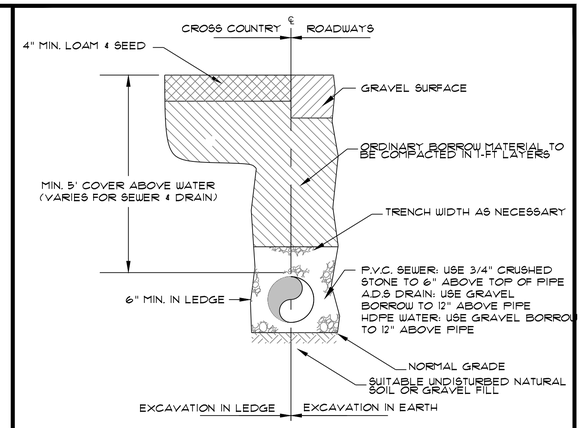

DETAIL: TYPICAL PIPE TRENCH

SCALE: N.T.S.

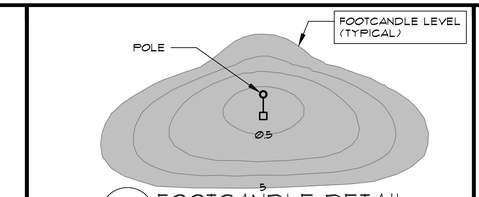

3 FOOTCANDLE DETAIL

SCALE: N.T.S

5 LIGHT DETAIL

SCALE: N.T.S

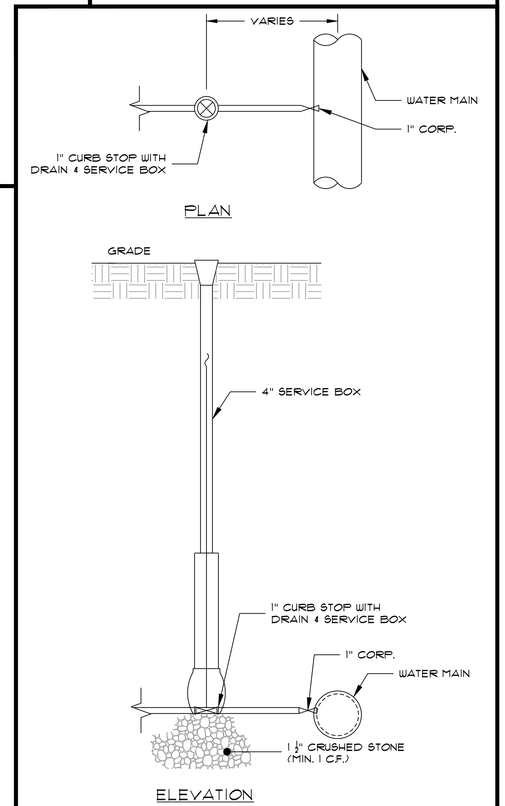

DETAIL: WATER SERVICE

SCALE: NTS.

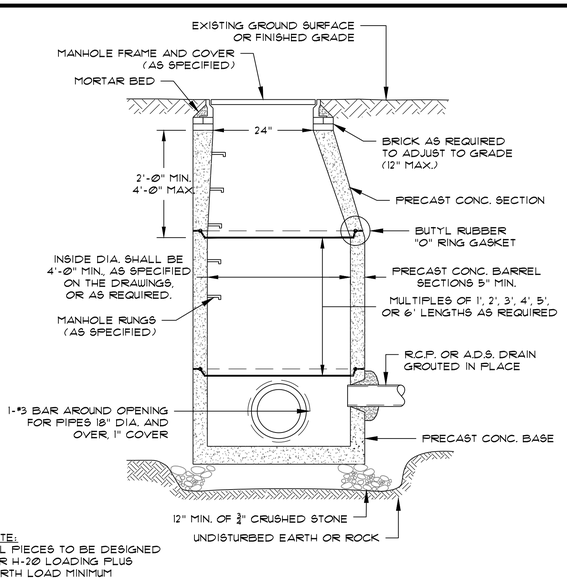

NOTE:
ALL PIECES TO BE DESIGNED FOR H-20 LOADING PLUS EARTH LOAD MINIMUM

TYPICAL PRECAST DRAIN MANHOLE DETAIL

SCALE: N.T.S.

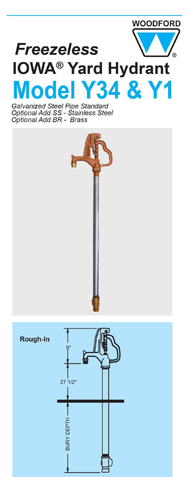

DETAIL: BLOW OFF HYDRANT

SCALE: NTS.

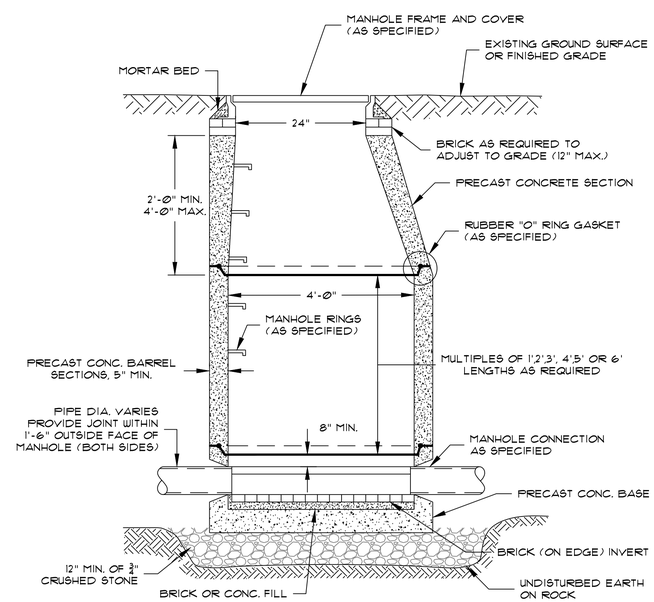

NOTE: ALL PIECES TO BE DESIGNED FOR H-20 LOADING PLUS EARTH LOAD MINIMUM

TYPICAL PRECAST SEWER MANHOLE DETAIL

SCALE: N.T.S.

THESE PLANS ARE FOR PERMITTING PURPOSES ONLY
NOT FOR CONSTRUCTION

PLANS TO ACCOMPANY PERMIT APPLICATIONS
PREPARED FOR:
THE NEILSEN TEAM
LOCATED AT:
133 WARFIELD ROAD
CHARLEMONT, MASSACHUSETTS

Design Group, Inc.
Civil Engineers * Surveyors * Consultants
2 FEDERICO DRIVE * PITTSFIELD, MASSACHUSETTS 01201 * (413) 443-3537

PLAN DESCRIPTION:
DETAILS

SK DESIGN GROUP PROJECT #:
230178

COMMONWEALTH OF MASSACHUSETTS
JAMES M. SCALISE, II
CIVIL
No. 39863
REGISTERED PROFESSIONAL ENGINEER

JAMES M. SCALISE II
SK DESIGN GROUP PRESIDENT
LICENSE #39863
PROFESSIONAL OF RECORD
PHONE: 413-443-3537

REVISION:

DRAWN BY: PTE	CHECKED BY: JMS II
ORIG. DATE: MAR. 1, 2024	SHEET NO. 10 OF 10
ISSUED FOR: PERMIT	
SCALE: AS NOTED	

G:\SK DESIGN GROUP\2023\230178 Neilsen Team-Warfield Retreat, Charlemont\Drawings\230178 SITE_GLAMPING 03042024.dwg
Plotted On: Friday, March 08, 2024 - 8:39am
User Name: peldridge